Representation of the outer dimensions (See the details in visualization)

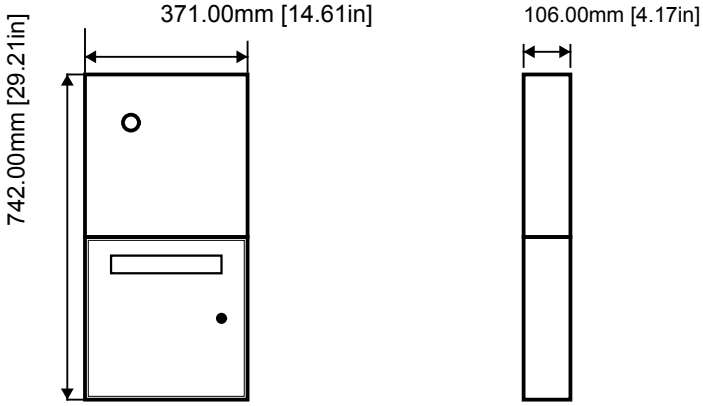



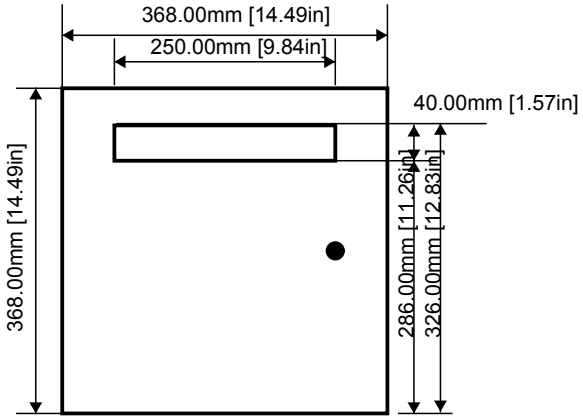

This configuration weighs around 17 KG.

Technical data:

1 x Nameplate configuration DBI-40468117
1 x Fence mailbox with covers
Letterbox flap without nameplate. Flush with front panel.

Stainless steel V4A (salt-water resistant), brushed

This system is an individual production according to customer specifications. The legal right of withdrawal therefore does not exist according to § 312 g Abs. 2 Nr. 1 BGB. Since the automated production process is started immediately after receipt of the order, a cancellation, a return or exchange after placing the order is not possible.

Date: 2026-11-23
Time: 01:47:53 CET
Project ID: DBL-67051696

DoorBird
Technology meets Design.

Bird Home Automation GmbH
Uhlandstraße 165
D-10719 Berlin, Germany
Confidential